CS-8B-3

Multi-Blade Horizontal Slicing

FOODTOOLS®
Industry Leaders in Portion Control

CS-8B-3

Average Speed:
18″ wide variable speed belt moving up to 8″ per second

Function:
This model is built to precisely and efficiently cut products into horizontal slabs. Slice off the top of a cake for an evenly cut professional look. Increase production and lower costs by baking one cake and slab cutting it into several thin layers for a layer cake. This machine uses 3 horizontal reciprocating Teflon-coated blades to cut consistent layers from 0.375″ and thicker and is great for bakeries producing layer cakes or slicing the crown off of cakes.

Benefits
- Achieve a return on investment through labor savings and improved portion quality and consistency
- Perfectly portion even layers every time
- Three cutting blades for efficient slabbing
- Small footprint and wheels for easy storage in busy production facilities
- Remove cutting knives and blades from human hands and cut layers mechanically
- Reliable and durable equipment backed by manufacturer's warranty

Multi-Blade Horizontal Slicing

www.foodtools.com

FoodTools Corporate Office
Santa Barbara, CA U.S.A.
805.962.8383
877.836.6386

FoodTools Central
South Haven, MI U.S.A.
269.637.9969
800.644.2377

FoodTools United Kingdom
Ongar, Essex U.K.
44.1277.364869

FoodTools Asia
Zhuhai, Guangdong China
86.756.2127528

sales@foodtools.com

FOODTOOLS®
Industry Leaders in Portion Control

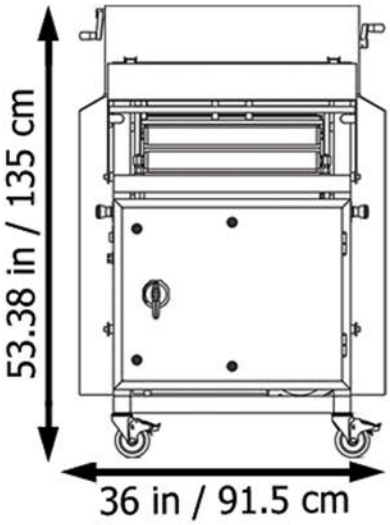

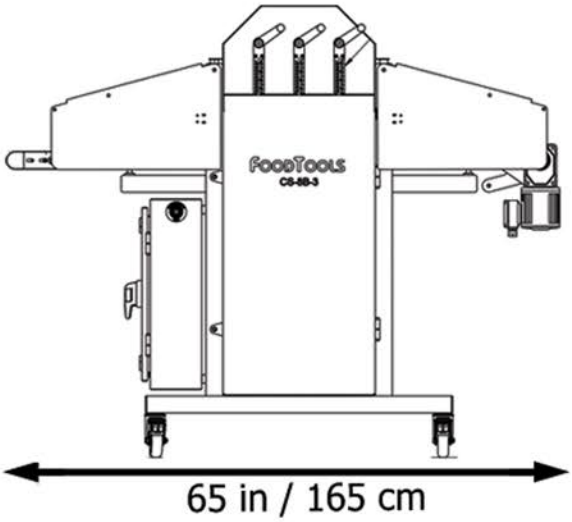

Power:
Electric 115/60/1 or 220/60/1 or 240/60/3

Product Size Ranges:
Up To 18.5 in (47 cm) Wide Products
Up To 5 in (12.7 cm) Tall Products

Portion Size Ranges
4 Slabs - As Thin As 0.375 in (9.5 mm)

FoodTools machines are manufactured with heavy duty anodized aluminum, stainless steel, and ultra-high molecular weight plastic. The equipment is designed for complete wash down requirements in production facilities.

Specifications are subject to change and are dependent on the product portioned or additional accessories to standard equipment.

© FoodTools - 03/2020